EVUVENT (EVU - S / SD / P / PD)

Ceiling Type Energy / Heat / High Efficient Heat Recovery Units

Assembly & Maintenance Guide

EN

INDEX

Introduction..... Page 1
Warnings & Safety Informations..... Page 2
Check List..... Page 3
Technical Specifications (EVU-S/SD Series)..... Page 4
Unit Dimensions (EVU-S/SD Series)..... Page 5
Technical Specifications (EVU-P/PD Series)..... Page 6
Unit Dimensions (EVU-P/PD Series)..... Page 7
Installation..... Page 8
Selection of Electrical Cable Cross-Section..... Page 10
Maintenance..... Page 11

INTRODUCTION

Installation & Operation Manual has been prepared and given to customer as a guide for easy installation&operation units manufactured by ENEKO A.Ş. The manual contains description of the unit, components and basic informations and recommendations for proper and fail free operation. Please read the instructions and warnings given in this manual before starting installation, operation and maintenance works and keep this manual near the unit, within easy reach of service personnel.

Any damage, failure or hazard occurred because of use except this purpose is beyond the responsibility of manufacturer.

For technical service and questions, please contact with following information.

+90 232 328 20 80 / 103-152
+90 536 713 10 00
www.eneko.com.tr
servis@eneko.com.tr

PROHIBITED

- This unit has to be used under proper conditions according to its technical specification and design purpose. (Otherwise responsibility belongs to practitioner)
- Unauthorized personnel must not interfere in unit and/or must not use unoriginal spare parts. (Otherwise responsibility of failure that may occur belongs to practitioner)
- Do not install this product in a refrigerated warehouse, heated swimming pool or other location where temperature and humidity are significantly different. (Failure to heed this warning may result in electrical shock or malfunctioning.)
- Do not install this product where it will be directly exposed to rain. (Failure to heed this warning may result in electrical shock or malfunctioning.)
- Do not install this product in a location where acid, alkali or organic solvent vapors, paints or other toxic gases, gases containing corrosive components or high concentrations of oily smoke are present (Failure to heed this warning may result not only in malfunctioning but also fire, power leakage and electrical shock.)
- Do not use this product outside the range of its rated voltage and control capacity.

ATTENTION

- Install this product in an environment where the temperature ranges from -10 °C to +40 °C and the relative humidity is less than 60%. If condensation is expected to form, heat up the fresh outside air by a duct heater etc.
- Select an adequately sturdy position for installing the product and install it properly and securely.
- Use the designated electrical wires for the terminal board connections and connect the wires securely so that they will not be disconnected. (Failure to ensure proper connections may result in fire.)
- When passing metal ducts through wooden buildings clad with metal laths, wire laths or metal, these ducts must be installed in such a way that they will not make electrical contact with metal laths, wire laths or metal sheets. (Power leakage can cause ignition.)
- The outside ducts must be tilted at a gradient (1/30 or more) downwards toward the outdoor area from the main unit, and properly insulated. (The entry of rain water may cause power leaks, fire or damage to household property.)
- Gloves should be worn while installation. (Failure to heed this warning may result in injury.)
- A dedicated circuit breaker must be installed at the origin of mains power supply. This circuit breaker must be provided with a means for locking (lock and key).
- The body of the unit, room control panel and cables keep away the unit 3 m. distance.

- This product must not be disassembled under any circumstances. Only authorized repair technicans are qualified to conduct disassembly and repairs.
  (Failure to heed this warning may result in fire, electrical shock or injury.)

- Connect the product properly to the ground. (Malfunctioning or power leaks can cause electrical shock.)

- An isolator switch having minimum contact gap of 3 mm in all poles must be provided as a means of disconnecting the power supply.

NOTE: The installations, which is not available for installation and operation manual, is out of guarantee.

CHECK LIST

In the event of unit failure and pre-commissioning checks to be made are determined as follows; after checking this information, please contact our company in case failure continues.

Controls	√
Make sure that the unit receives power and electrical grounding is made!	
Make sure that the electricity cables are drawn from in the correct cross section! (Please check whether there is heating on cables or not.)	
Please check whether the cables in unit control panel are shielded (shielded magnetic field) or not; make sure shielding is grounded. If not, please change them!	
Make sure that fresh air and exhaust air filters are clean and they do not block the flow of air!	
Make sure there is the connection of drainage on the unit, check any possible clogging in drainage line and clean if necessary!	
Please check whether the diameter of the air duct connection of the unit and the diameter of the spigot are the same. If the duct connection is smaller, change it with the correct one.	
Make sure the electrical connections of the unit are made as suggested on the unit and in this guide, check if there is incorrect connection.	
Make sure during the installation of the unit there is enough space for the service and if there is not enough space, re-install again.	
In extremely cold climate applications, frost may occur on the exchanger, apply electric heater in fresh air intake section of the unit to get the temperature to -5 °C and above.	
After installing the unit, make sure that it does not create an abnormal sound or vibration, if there is, make sure that rubber pads are used.	

Product Model Identifier		EVU-S/SD 250	EVU-S/SD 500	EVU-S/SD 800	EVU-S/SD 1000	EVU-S/SD 1500	EVU-S/SD 2000
Manufacturer		ENEKO					
Erp		Erp 2018					
Declared typology		NRVU/BVU					
Type of drive		Variable speed drive (VSD)					
Type of HRS	%	Other					
Thermal efficiency of HRS[1]	%	73.0	73.0	73.0	73.0	76.0	75.0
Nominal flow rate	m^3/s	0.060	0.118	0.193	0.257	0.314	0.439
Effective electrical power input	W	60	122	212	275	374	492
SFPint	$W(m^3/s)$	405	584	819	573	900	875
Face velocity at design flow rate	m/s	0.64	0.79	0.95	0.96	1.02	1.07
Nominal external pressure drop (ΔPs,ext)	Pa	100	100	100	100	100	100
Internal pressure drop of ventilation components (ΔPs,int)	Pa	70	110	166	171	208	218
Internal pressure drop of non-ventilation components (ΔPs,add)	Pa	N/A					
Static efficiency of fans used in accordance with Regulation (EU) No. 327/2001		39	43	50	52	53	58
Declared maximum external leakage rate	%	< 3					
Declared maximum internal leakage rate	%	< 5					
Energy classification of the filters (Energy performance)		Coarse > 40% (According to ISO 16890)					
Description of visual filter warning for NRVUs intented for use with filters		Timer					
Casing sound power level (L_{WA})		51/48	52/49	63/59	58/55	59/57	65/62
Internet adress for pre-/dis-assembly instructions		www.eneko.com.tr					

[1] EN 308 condition (OA = 5°C & 72%, RA = 25°C & 28%).

EVU-S/SD UNIT DIMENSIONS

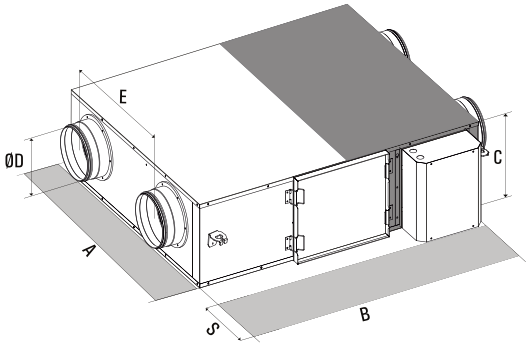

	A	B	C	ØD	E	S	Unit Weight
EVU-S 250	750	907	296	Ø160	404	700	34
EVU-S 500	922	1130	344	Ø200	499	700	46
EVU-S 800	1014	1214	410	Ø250	589	760	51
EVU-S 1000	1294	1606	410	Ø300	719	760	79
EVU-S 1500	1128	1807	552	Ø355	623	800	97
EVU-S 2000	1428	1807	552	Ø355	921	800	106

* All measurement values are mm.
* Unit weight is kg.
* The gaps of the maintenance area values are specified as “S” on the table. (”Installation” is on page 8.)

	A	B	C	ØD	E	S	Unit Weight
EVU-SD 250	808	956	358	Ø160	404	700	52
EVU-SD 500	981	1186	416	Ø200	505	700	83
EVU-SD 800	1071	1264	472	Ø250	590	760	97
EVU-SD 1000	1351	1657	472	Ø300	720	760	135
EVU-SD 1500	1185	1856	614	Ø355	623	800	164
EVU-SD 2000	1485	1856	614	Ø355	921	800	179

* All measurement values are mm.
* Unit weight is kg.
* The gaps of the maintenance area values are specified as “S” on the table. (”Installation” is on page 8.)

Product Model Identifier		EVU-P/PD 250	EVU-P/PD 500	EVU-P/PD 800	EVU-P/PD 1000	EVU-P/PD 1500	EVU-P/PD 2000
Manufacturer		ENEKO					
Erp		Erp 2018					
Declared typology		NRVU/BVU					
Type of drive		Variable speed drive (VSD)					
Type of HRS	%	Other					
Thermal efficiency of HRS[1]	%	83.8	82.2	81.2	81.6	80.0	79.9
Nominal flow rate	m^3/s	0.069	0.139	0.222	0.278	0.389	0.528
Effective electrical power input	W	71	151	278	270	496	648
SFPint	$W(m^3/s)$	405	584	819	573	900	875
Face velocity at design flow rate	m/s	1.03	1.30	1.54	1.45	1.75	1.79
Nominal external pressure drop (ΔPs,ext)	Pa	100	100	100	100	100	100
Internal pressure drop of ventilation components (ΔPs,int)	Pa	80	132	206	155	252	258
Internal pressure drop of non-ventilation components (ΔPs,add)	Pa	N/A					
Static efficiency of fans used in accordance with Regulation (EU) No. 327/2001		40	45	50	54	56	59
Declared maximum external leakage rate	%	< 3					
Declared maximum internal leakage rate	%	< 5					
Energy classification of the filters (Energy performance)		Coarse > 40% (According to ISO 16890)					
Description of visual filter warning for NRVUs intented for use with filters		Timer					
Casing sound power level (L_{WA})		51/48	52/49	63/59	58/55	59/57	65/62
Internet adress for pre-/dis-assembly instructions		www.eneko.com.tr					

[1] EN 308 condition (OA = 5°C & 72%, RA = 25°C & 28%).

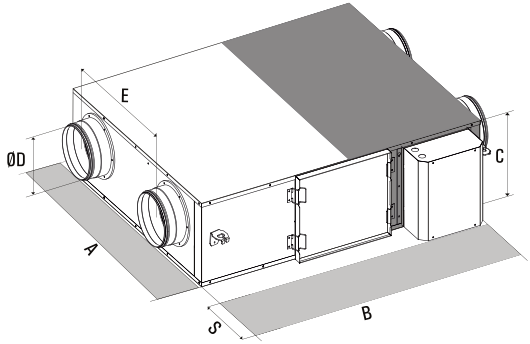

	A	B	C	ØD	E	S	Unit Weight
EVU-P 250	760	1110	296	160	404	700	45
EVU-P 500	934	1325	355	200	499	700	64
EVU-P 800	1024	1387	400	250	589	760	71
EVU-P 1000	1304	1780	410	300	719	760	113
EVU-P 1500	1138	1920	552	355	623	800	117
EVU-P 2000	1438	1920	552	355	921	800	140

* All measurement values are mm.
* Unit weight is kg.
* The gaps of the maintenance area values are specified as “S” on the table. (”Installation” is on page 8.)

	A	B	C	ØD	E	S	Unit Weight
EVU-PD 250	808	1163	355	160	404	700	59
EVU-PD 500	981	1378	412	200	500	700	84
EVU-PD 800	1071	1440	469	250	590	760	95
EVU-PD 1000	1351	1833	469	300	720	760	145
EVU-PD 1500	1185	1973	610	355	625	800	156
EVU-PD 2000	1485	1973	610	355	920	800	184

* All measurement values are mm.
* Unit weight is kg.
* The gaps of the maintenance area values are specified as “S” on the table. (”Installation” is on page 8.)

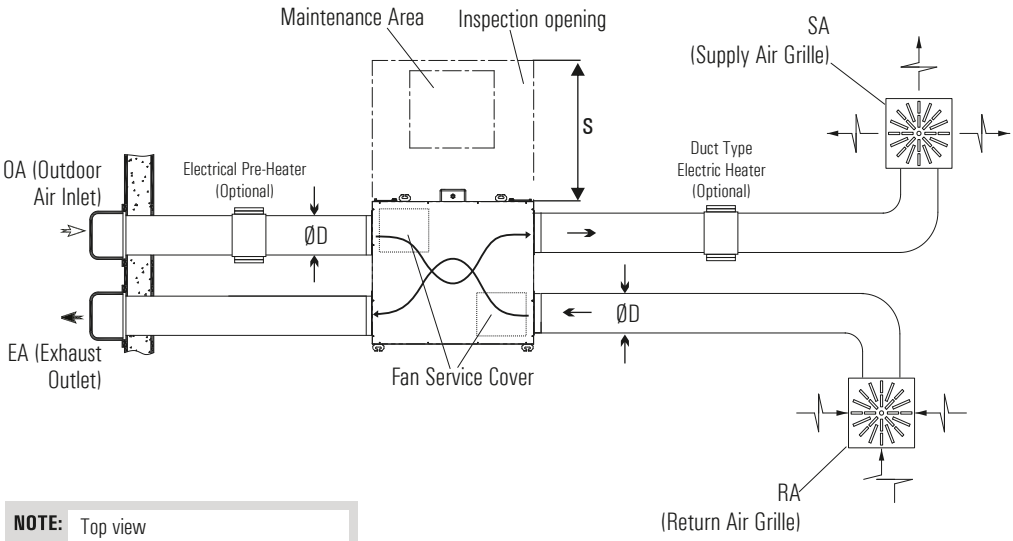

NOTE: Top view
* The gaps of the maintenance area are specified as "S" on the technical picture. ("Unit Dimension" is on pages 5, 6, 8)

NOTE: Fan access panels are under the unit.
A service space of "C" must be left under the unit for fan service. (Please see unit dimension pages.)

! CAUTION

Check these warnings before installation.

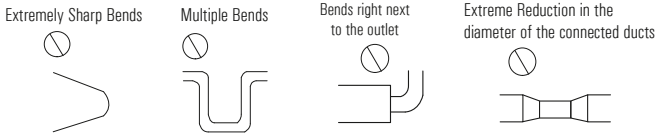

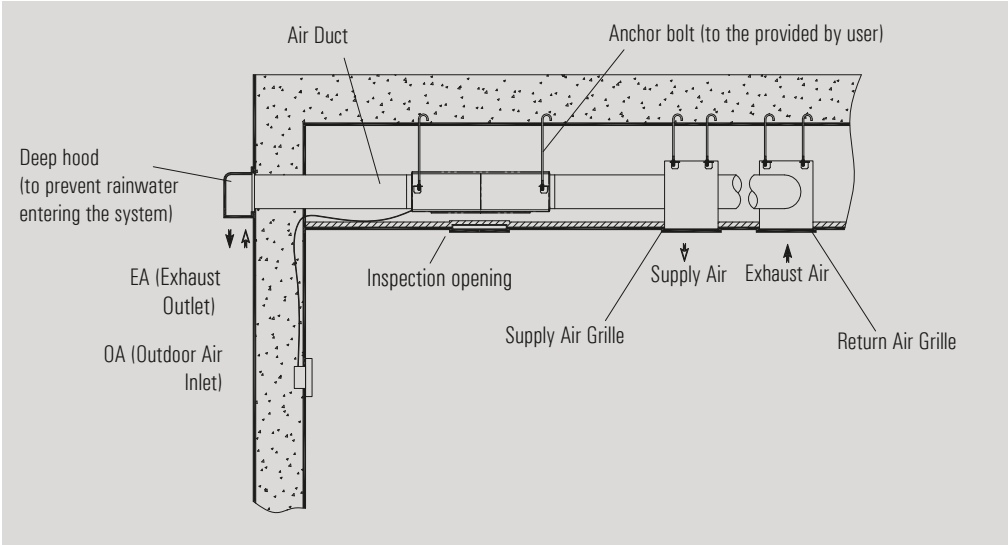

Preparing The Sling Bolts

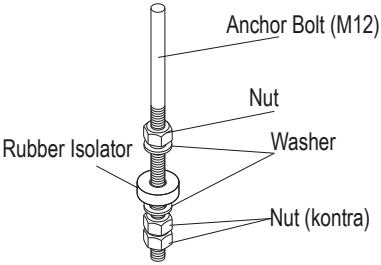

Hang the suspension braket on the anchor bolts and adjust in such a way that the unit is installed horizontally. Tighten up securely using double nuts in order to prevent looseness.

! WARNING
Check the stability of sling bolts during the installation.

Attaching The Duct Connection Flanges

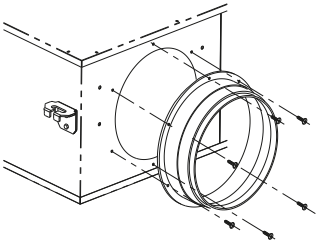

If the duct connection flanges are not connected to the unit, use the screws that can be found in the installation package to connect the flanges to the unit as the figure on the left.

! WARNING
Before attaching the duct connection flanges, check that no foreign matter has found.

Installation Of The Unit

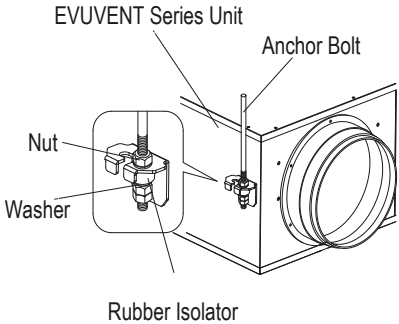

Hang the unit on the anchor bolts and adjust in such a way that the unit is installed horizontally. Tighten up securely using double nuts in order to prevent looseness.

Unit Model EVU-S/SD/P/PD	Unit Voltage (V)	Unit Power Input (kW)	Current (A)	Fuse (A)	Cable Cross-Section(mm^2) for 50M and PF=0.8
250	230	0,138	0,94	1,00	1,5
500	230	0,280	2,18	2,50	1,5
800	230	0,380	2,88	3,15	1,5
1000	230	0,380	2,98	4,00	1,5
1500	230	1,040	4,58	5,00	2,5
2000	230	1,040	4,58	5,00	2,5

The data in the table shows the maximum power/current values. Please check unit label for updated values.

Cable Cross-Section Formulas

1

$$I_{current} = \frac{P}{U.Cos\Omega}$$

$$I_{cable} > I_{current}$$

2

$$\%e = \frac{100.P.L}{k.S.U^2} \;,\; S = \frac{100.P.L}{k.\%e.U^2}$$

$$\%e = \%3$$

3

$$I_{cable} > I_{fuse} \geq I_{current}$$

Cable Cross-Section S=Max (S1, S2, S3, 1.5mm^2)

P : Power
I : Current
U : Voltage
S : Conductor cross section
k : Conductor coefficient
L : Conductor length
%e : The voltage drop

Example of Cable Cross-Section Calculation

P : 1 kW
U : 230V
PF : **CosΩ**: 0.8
L : 50m
%e : %3
k : 56m / Ω

1

$$I_{current} = \frac{1000\ W}{230.0,8} = 5.43\ A$$

The cable will be used, is selected from the cable cross-section table so that the equivalent ampere value in the table should be higher than calculated "$I_{current}$" value.

S1 = 1.5 mm^2

2

%e = %3

$$S = \frac{100.1000.50}{56.3.230^2} = 0.56\ mm^2$$

S2 $\geq$ 0.56 mm^2 $\geq$ 0.75mm^2

S2 = 0.75mm^2

3

$I_{cable} > I_{fuse} \geq I_{current}$

I_{cable} > 10A $\geq$ 5.43A

"I_{fuse}"which will be higher than "$I_{current}$", is selected.

The cable will be used, is selected from the cable cross-section table so that the equivalent ampere value in the table should be higher than selected "I_{fuse}" value.

I_{cable} = 24A
S3 = 1.5 mm^2
Cable cross-section S=Max (S1, S2, S3, 1.5 mm^2)
S=Max (1.5, 0.75, 1.5, 1.5)
S=1.5 mm^2

- TURN OFF all the power switches before the maintenance is performed.
- Do not operate the system without the air filter to protect the components of the unit against being clogged.
- Clean up the air filter more than once in a year.
- Clean up the heat exchanger more than once per year.

Heat Exchanger Cleaning

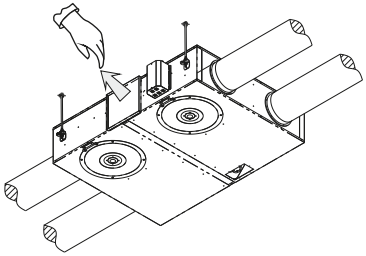

Step 1: Remove the exchanger's service cover, then remove the heat exchanger out from the main unit.

Note: The maximum weight of heat exchanger is 10 kg.

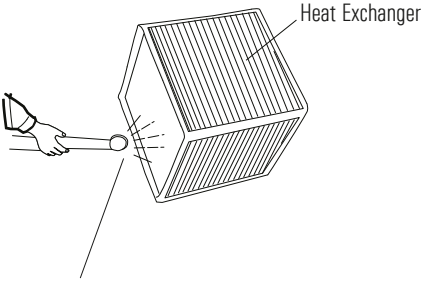

Step 2: Cellulosic heat exchanger can be cleaned by using vacuum. Aluminium heat exchanger can be cleaned by hot water or steam. Leave to dry after cleaning heat exchanger. Connect the unit after making sure that the heat exchanger has dried.

Air Filter Cleaning

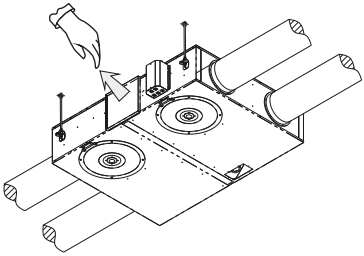

Step 1: Open the filter service cover. Remove the air filters from the unit.

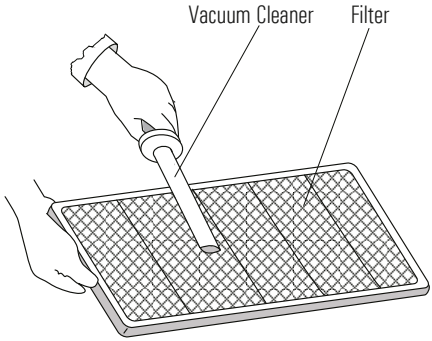

Step 2: Use a vacuum cleaner to suck up the dust from the air filter. If necessary, use warm water with addition a house detergent to remove the persistent dirt. Leave to dry after cleaning the air filter. Connect the unit after making sure that the filter has dried.

NOTES

NOTES

Warranty Certificate

* If the unit is used according to the instructions given in user manual and interfered in only authorized technical service that we authorize about any maintenance and repair reasons, all spare parts will be under warranty for 2 years against material, labor and production faults except motor components.
* Identifying of parts replaced and determining troubleshooting technical procedure applied, will belong to our company.
* After ex-works of goods, all faults during loading, unloading and shipment will be out of guarantee. If a falsify has been made on documents or any falsify and changing have been made on serial number, goods will be out of guarantee.

Terms of Guarantee

1. Guarantee period is 2 years as from the time of delivery.
2. All spare parts except motor components are under warranty.
3. If the goods break down during guarantee period, the time spent for maintenance will be added to guarantee period. Maintenance period is 30 days at most. 30 days begin with the notice to a service station. If there is no service station, 30 days begin with the notice to the seller, dealer, agency, agent, importer or manufacturer of the goods.
4. If production fault occurs during guarantee period; the cost of new spare part and labor will not be claimed from the customer.
5. If a fault occurs because of not using or assembling according to the instructions given in user manual, goods will be out of guarantee.

UNIT TYPE

SERIAL NO

SIGNATURE:

ENEKO Havalandirma ve Isi Ekonomisi
Sistem Teknolojileri Makina San. ve Tic. A.S.
10049 Sokak No:04 AOSB Cigli/IZMIR
Tel: 0.232.328 20 80
Web Address: www.eneko.com.tr

www.eneko.com.tr

ISTANBUL

Cevizli District, Zuhal Avenue, Fusun Street, Ritim Istanbul
A5 Block Floor: 25 No: 137, 34846 Maltepe/Istanbul - TURKEY

+90 216 455 29 60 /+90 216 455 29 61

+90 216 455 29 62

satis@eneko.com.tr

IZMIR

10049 Street No: 4 I.A.O.S.B.
Cigli/Izmir - TURKEY

+90 232 328 20 80

+90 232 328 20 22

info@eneko.com.tr

REV03 15.08.2024

95201507